Fisheries Research 111 (2011) 170–176

Contents lists available at ScienceDirect

Fisheries Research

journal homepage: www.elsevier.com/locate/fishres

# A comparison of multi-class support vector machine and classification tree methods for hydroacoustic classification of fish-schools in Chile

H. Robotham[a,*], J. Castillo[b,1], P. Bosch[a,2], J. Perez-Kallens[a,3]

[a] Facultad de Ingeniería, Instituto de Ciencias Básicas, Universidad Diego Portales, Avenida Ejército 441, Santiago, Chile
[b] Depto de Evaluaciones Directas – Instituto de Fomento Pesquero-Blanco 839 Valparaíso, Chile

ARTICLE INFO

*Article history:*
Received 4 May 2011
Received in revised form 28 July 2011
Accepted 31 July 2011

*Keywords:*
Classification tree
Support vector machines
Species identification
Hydroacoustics
Fish

ABSTRACT

The purpose of this study was to compare the results of the multi-class support vector machines (SVM) classification method to those of the classification tree (CART) method for automatic classification of fish schools. The discrimination study was done using descriptors of morphology, bathymetry, energy, and space positions for schools of three species; anchovy (*Engraulis ringens*), common sardine (*Strangomera bentincki*), and jack mackerel (*Trachurus murphyi*) from acoustic data in southern-central Chile. The classification rate averages were 86.8% with classification trees and 89.5% with SVM. The levels of importance of the descriptors presented by the two methods are not fully concordant (Kendall's rank coefficient of concordance is 0.77). However, the two methods agree on the groups of descriptors considered as effective for classification. The bottom depth descriptor was the most important for classification trees, while the school-altitude index was the most important for SVM. This highlights the importance of the bathymetric and positional descriptors in the classification of species compared to energetic and morphometric descriptors. Advantages and disadvantage of the methods are presented. Classification trees have the advantages over SVM of being easier to implement and interpret, but have a lesser performance. One major problem with trees is their high degree of variance. Because each classification method has its own performance, limitations and advantages, a good practice is to use two or more classifiers.


## 1. Introduction

Acoustic techniques are widely used around the world to study the behaviour of fish and estimate their abundance and distribution. These techniques have made significant progress in recent decades with the development of more rapid computers, new transducers and microelectronics. Despite the technological advances in acoustic devices with improvements in detection capacity and computer processing, there is still the challenge of species identification directly by acoustics (MacLennan and Holliday, 1996; Horne, 2000; Fernandes et al., 2006; Trenkel et al., 2008). Echograms provide information about size, location and echo intensity of fish schools, however the species composition is not directly known (Fernandes, 2009). An approach to solve this question is to perform algorithms that use different parameters in the post-processing of acoustic signals to identify species. The possibility to provide acoustic species identification of individual fish schools is based on the assumption that schooling process reflects differences in the behaviour among species allowing for an inference about the species. Acoustic species identification will probably not be successful in discriminating two different species forming schools.

Species are usually classified by scrutinizing the echograms, use of expert criteria and additional information from trawl sampling (Simmonds and MacLennan, 2005). Because this procedure incorporates some degree of subjectivity in interpretation, other approaches have been developed based on the information provided by echosounders. Species identification based on school descriptors of morphology, bathymetry, energy and geographical position extracted from single-frequency and single beam acoustic data represents one approach (Scalabrin et al., 1996). A second approach uses multi-frequency acoustic data (Korneliussen et al., 2009), combined with information about the morphological and geographical distribution of fish species.

A wide range of classification models has been used to classify fish schools based on acoustics/school descriptors: principal component analysis and discriminant-function analysis (Nero and Magnuson, 1989; Vray et al., 1990; Scalabrin et al., 1996; Lawson et al., 2001); artificial neural networks (Haralabous and Georgakarakos, 1996; Simmonds et al., 1996, Cabreira et al., 2009);

* Corresponding author. Tel.: +56 2 6762416; fax: +56 2 6762402.
*E-mail addresses:* hugo.robotham@udp.cl (H. Robotham), jorge.castillo@ifop.cl (J. Castillo), paul.bosch@udp.cl (P. Bosch), jaime.perez@udp.cl (J. Perez-Kallens).
[1] Tel.: +56 32 2151474; fax: +56 3 2 2151465.
[2] Tel.: +56 2 6762409; fax: +56 2 6762402.
[3] Tel.: +56 2 6762420; fax: +56 2 6762402.

0165-7836/$ – see front matter © 2011 Elsevier B.V. All rights reserved.
doi:10.1016/j.fishres.2011.07.010

nearest-neighbor analysis (Richards et al., 1991); k-means clustering (Tegowski et al., 2003); mixture models (Fleischman and Burwen, 2003; Korneliussen et al., 2009), kernel-methods (Buelens et al., 2009), statistical-spectral (Demer et al., 2009), probabilistic models (Fablet et al., 2009; Lefort et al., 2011), classification trees (Fernandes, 2009; Lefort et al., 2010; Lefort, 2010) and support vector machines (SVM, Robotham et al., 2010).

Because the classification methods have different performances, comparing methods will allow for selecting the best model. Several methods have been compared (Haralabous and Georgakarakos, 1996; Simmonds et al., 1996; Woodd-Walker et al., 2003; Hutin et al., 2005; Robotham et al., 2010), however, the performances of classification trees and support vector machine methods have not. Classification trees have been used in applications related to ecology, botany and medical diagnosis (Breiman et al., 1984; Ripley, 1996; De'Ath and Fabricius, 2000) and only recently for species identification of fish-school echotraces (Fernandes, 2009). Support vector machines are a statistical classification method proposed by Vapnik (1995) that has received considerable attention in different applications in pattern recognition, such as face detection, text classification, species identification in ecology (Morris et al., 2001), fish age classification (Bermejo, 2007) and recently for the automatic classification of small pelagic fish species from acoustic survey data (Robotham et al., 2010).

The purpose of this study was to compare the results of support vector machines and classification-tree methods for automatic acoustic identification of small pelagic fish species; anchovy (*Engraulis ringens*), common sardine (*Strangomera bentincki*) and jack mackerel (*Trachurus murphyi*) in southern-central Chile.

## 2. Materials and methods

### 2.1. Data collection

School data were obtained from acoustic surveys performed with the R/V Abate Molina in northern and south-central Chile in 2006. The data were collected using a scientific echosounder (SIMRAD EK-500) with a split-beam transducer (ES38 38 kHz) with a nominal $-3\,\mathrm{nmi}^{-2}$ beam width of 7°, calibrated according to standard procedures (Foote et al., 1987). The ping rate of the echosounder in the surveys was $1\,\mathrm{s}^{-1}$, the pulse duration was 1 ms. A minimum threshold of −65 dB was used during the post processing data. An Engel pelagic trawl with a 14-m vertical opening and 14-mm mesh size in the cod end was used to identify the species in the acoustic survey. The flotation line of this net was adapted for fishing near the surface.

The acoustic records of the fish schools detected by the echosounder were processed with Echoview 4.60.68. (Myriax, 2008). The parameters of the fish schools were determined automatically by the algorithm SHAPES programmed into the software Echoview and described in Barange (1994), Coetzee (2000), and Lawson et al. (2001). Each aggregation was manually marked in a region on the image of the echogram, and each case was individually analyzed. In order to have the major number of fish aggregations the parameters to recognize schools in the software were minimum candidate height = 1 m, minimum candidate length = 1 m, maximum vertical linking distance = 1 m, and maximum horizontal linking distance = 15 m. Fig. 1 presents some echotraces characteristics of the species studied.

### 2.2. Data analysis

The input data for a classification of fish-school is a collection of acoustics records. Each acoustic record, is characterized by a tuple $(x,y)$, where "$x$" is the descriptors set and "$y$" is a set of category (class) species. We used 12 descriptors for each school detected, which were grouped into four categories (Scalabrin and Massé, 1993): (i) Morphological: mean height (m); length (m); perimeter (m); area ($\mathrm{m}^2$); elongation = length/mean; height; fractal dimension = 2ln(0.25 × perimeter)/ln(area); (ii) Bathymetric: bottom depth (m), mean school depth (m), school altitude index = 100(1 − mean school depth/bottom depth); (iii) Energetic: acoustic energy = $s_A$ ($\mathrm{m}^2\,\mathrm{nmi}^{-2}$); school internal acoustic density = $s_A$/area ($\mathrm{nmi}^{-2}$) and (iv) Space position: school-shore distance (nm).

The classification techniques were applied to the most reliable acoustic records, that is, those hauls in which a single species exceeded 90% of the catch. Only summer and daytime observations were considered. The final database used for classification was limited to the study area most frequently shared by all three species. In all, 1944 monospecific schools were validated by the trawl. A subset of 990 schools was selected for pattern recognition analysis in the study area: 134 were jack mackerel, 442 sardine, and 414 anchovy. Both SVM and classification tree methods were trained using the same training sample and their performances were evaluated with the same test sample. A total of 762 schools (316 anchovy, 339 common sardine and 107 jack mackerel) were used for training and 228 (98 anchovy, 27 common sardine and 103 jack mackerel) for testing. Small or large data sets are not a difficult to produce accurate classifiers (Breiman et al., 1984). In this work we used a large data set. The accuracy was estimated by using the 23% of data and the classifier was developed using the other 77% of data. The SVM models were calibrated using SVM light software, developed by Joachims (2001) and classification trees with IBM SPSS Statistic 19.

The importance of descriptors in relation to the SVM method was expressed as the error model when one descriptor at a time is removed relative to the error model with all descriptors included. The importance of a variable (predictor) in relation to the classification tree method was defined as the sum across all nodes in the tree of the improvements (decrease in impurity expressed in the Gini (Breiman et al., 1984) index) that the predictor had when it was used as a primary splitter. Finally, for each method, the importance of a variable is expressed in terms of a standardized quantity $Z$. The higher the value of $Z$, the greater the contribution of the variable in the general structure of the model. Kendallĭs coefficient of concordance (Snedecor and Cochran, 1980) was used to measure agreement between methods.

### 2.3. Support vector machines

A classification technique that has received considerable attention is support vector machines. Support vector machines is a statistical classification method proposed by Vapnik (1995), originally designed for binary classification.

In order to present the original optimization problem, let us suppose that we have a set of pairs of data, $\{(x_1,y_1),(x_2,y_2),\ldots,(x_n,y_n)\}$, in which $x_i \in R^d$ represents the vector of characteristics, for instance, in this work $d = 12$ because we are considering 12 descriptors of the fish school and each fish school is represented by the vector $x_i$. On the other hand, $y_i \in \{-1, +1\}$ is the variable that allows us to classify each fish school or, in our case, discern between one species and another. A hyperplane, or linear function of separation of the data, can be written as $D(x) = \beta^t x = \beta_0$ where, $\beta \in R^d$ and $\beta_0 \in R$ are the variables of the optimization problem, with feasible set defined by all possible separation hyperplanes that satisfy all constraints used to define the separation of each fish school observations. This set can be represented compactly using the inequalities $y_i[\beta^t x_i + \beta_0]$ for all observations $i = 1,2,\ldots,n$. A separation

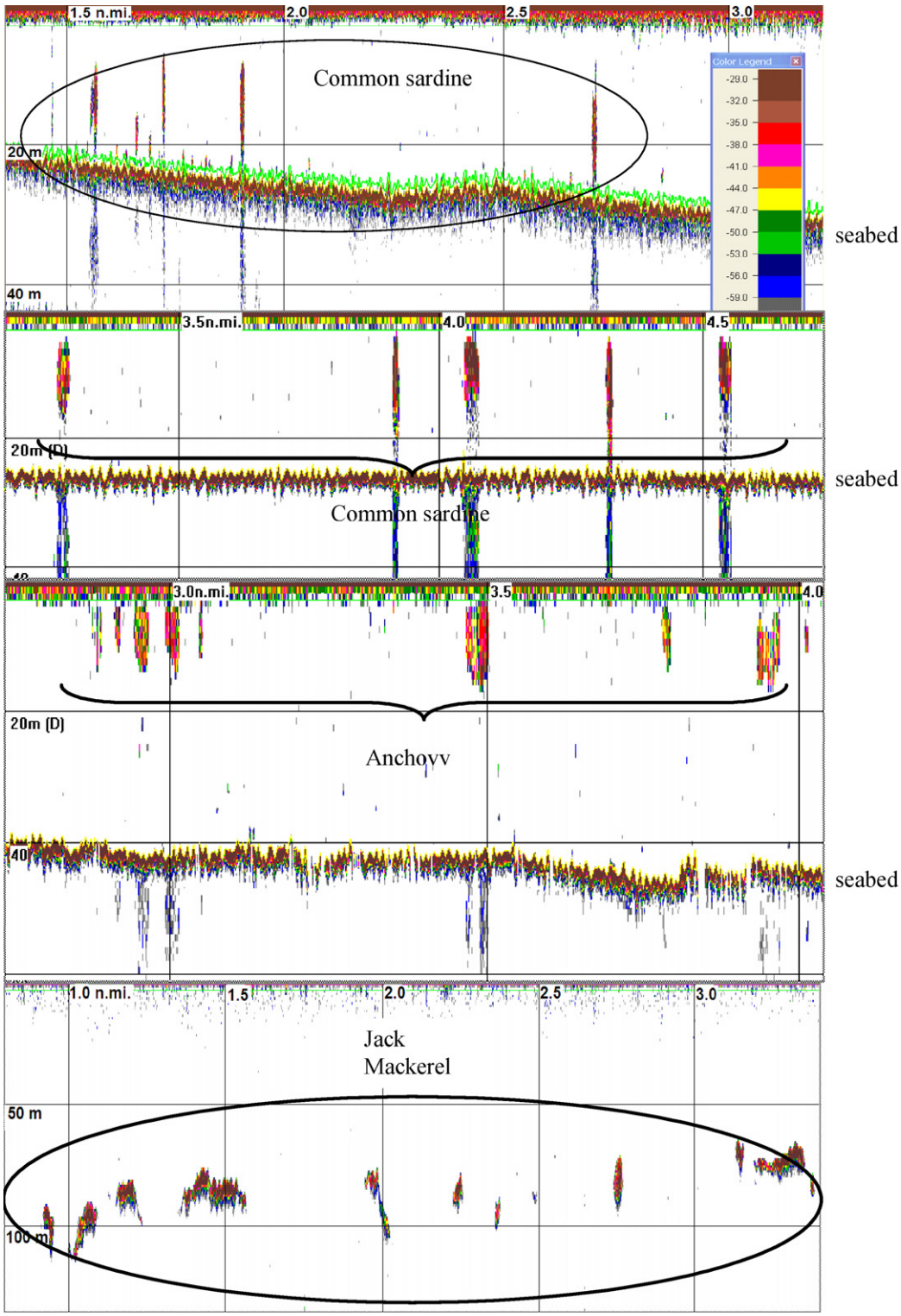


**Fig. 1.** Some echotraces of common sardine (a and b), anchovy (c), and jack mackerel (d) in the central-south area of Chile.

hyperplane is considered optimal, if the margin (defined as a distance from the separation hyperplane to the nearest data) is at its maximum size (Fig. 2). Intuitively, larger margins correspond to better generalizations. Therefore, the problem of finding the optimal hyperplane is equivalent to finding $\beta \in R^d$, which maximizes the margin. In general, this is a quadratic optimization problem with linear constraints defined by inequalities. The data points, where the constraints are active are called support vectors, i.e. the fish schools that define the size of the margin.

When data cannot be separated without error, the problem of finding the optimal hyperplane can be interpreted in the regularization framework with a ridge penalty term and the inner product kernel $(x_i, x_j)$. This optimization problems must also be translated into its dual form, obtained the following quadratic optimization problem:

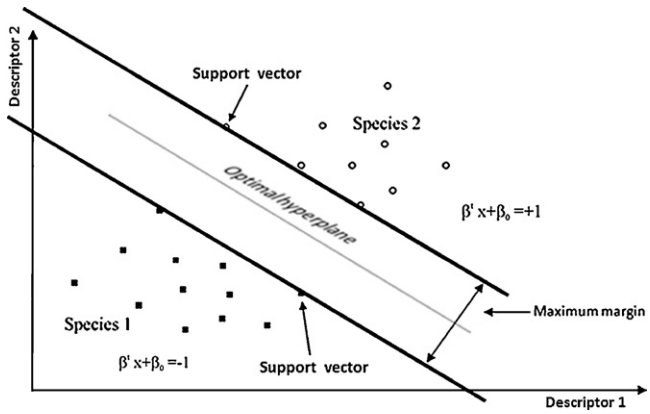


**Fig. 2.** Separating hyperplanes in a two-dimensional space. Optimal hyperplane on support vector machines. The data points at the margin are called support vector because they define the optimal hyperplane.

Maximize the functional

$$Q(\alpha) = \sum_{i=1}^{n} \alpha_i - \frac{1}{2} \sum_{i,j=1}^{n} \alpha_i \alpha_j \alpha_i \alpha_j K(x_i,\ x_j) \tag{1}$$

subject to constraints

$$\sum_{i=1}^{n} \alpha_i y_i = 0 \tag{2}$$

and

$$0 \le \alpha_i \le \frac{c}{n} \quad \forall i = 1, 2, \ldots, n \tag{3}$$

To find a classifier function using the support vector machine, we must determine what type of kernel function is going to be used, which should reflect a priori knowledge of the problem, and the regularization parameter $C$.

Therefore, for classification of nonseparable data, the decision function is given by:

$$H(x) = \sum_{i=1}^{n} \alpha_i^* y_i K(x_i, x) \tag{4}$$

where the parameters $\alpha_i^*$, $i = 1, 2, \ldots, n$ is the solution of the above quadratic optimization problem.

However, for classification, Gaussian kernels are widely recommended in the literature (Scholkopf and Smola, 2002) since, only the $\sigma$ parameter of the kernel must be estimated and also, it is more stable. The parameter $\sigma$ defines the width have the inner product kernel

$$K(x^{(1)}, x^{(2)}) = \exp\left\{ -\frac{||x^{(1)} - x^{(2)}||^2}{\sigma^2} \right\} \tag{5}$$

Even though support vector machines were originally designed for binary classification; it can be used for multi-class problems. In general, two strategies are used to approach the multi-class SVM problem (Hsu and Lin, 2002). In the first, a series of binary classifications are solved distinguishing between four approaches: one-species against-one (1-vs.-1) (Knerr et al., 1990), one-species-against-the-Rest (1-vs.-R) (Bottou et al., 1994), direct acyclic graph SVM (DAGSVM) (Platt et al., 2000) and error correcting output codes (ECOC) of kernel machine (Dietterich and Bakiri, 1995). The second strategy directly considers all the data in a single optimization formulation, obtaining a problem that is far more difficult to solve numerically (Weston and Watkins, 1998; Crammer and Singer, 2001). Robotham et al. (2010) used SVM and Neural Network to classify small pelagic species. The article showed that the best multi-class performance was obtained from 1-vs.-R. Herein, we used the 1-vs.-R approach to classify multi-class SVM. With 1-vs.-R, the classifiers ($k$ hyperplanes) are defined by labeling the species to be identified as +1 and the remaining species −1. The classification corresponds to the species whose classifier functions evaluated in the fish schools vector of descriptors used for testing, was greatest.

### 2.4. Classification trees

The decision-tree method is a nonparametric approach for building classification models. A decision tree is a top down tree structure consisting of internal node, leaf nodes, and branches. Each node represents a rule involving one of the input variables (descriptors). Each leaf represents a class (species). The true purpose of a classification tree is to classify the data into distinct groups or branches that create the strongest separation in the values of the dependent variable. A classification is made by starting at the root node and descending to one leaf. This technique employs a learning algorithm to identify a model that best fits the relationship between a set of dependent variables (descriptors) and a set of categories (classes). Examples of some well-known decision tree algorithms include chi-square automatic interaction detection (CHAID) (Kass, 1980), classification and regression trees (CART) (Breiman et al., 1984), induction decision trees (ID3) (Quinlan, 1986), and the extension of earlier ID3 algorithm (C4.5) (Quinlan, 1993).

The main differences between algorithms for tree construction are the pruning strategy used and the exact rule for splitting nodes (Ripley, 1996). Most algorithms recursively partition the data, usually using a binary split. ID3 and C4.5 use the entropy measurement as their splitting function. The CHAID decision-tree algorithm uses a splitting criterion based on a chi-square test. CART (classification and regression trees) uses the Gini index to measure impurity at a node, and then chooses the split to maximize the reduction in impurity. The pruning strategy provides a form of model selection. Among the reasons for using the pruning are avoiding model over fitting in the context of decision tree induction and generating an appropriate size tree by eliminating less informative branches. Most tree-based methods use a strategy of growing a large tree and then pruning nodes according to pruning criteria.

In this work we used the classification and regression tree (CART) algorithm. CART is a popular approach to construct a binary-tree based classifier. The algorithm CART for classification adaptively split the input space into disjoint regions in order to construct a decision boundary. CARTĭs algorithm (Breiman et al., 1984) employs a recursive partitioning strategy where the space of characteristics is divided into two regions by a split that provides the best separation of the classes (species) according to some cost function. The splitting process can be represented as a binary tree with two child nodes from each parent node. The process can be divided in three phases: (i) Construction of the tree, (ii) Pruning the tree, and (iii) Selection of optimal tree.

## 3. Results

Table 1 shows the parameters ($C$, $\gamma$) estimated to solve the problem of the multi-class SVM approach. There is no single procedure for estimating these two parameters. In this study, the parameters of the Gaussian kernel $\gamma = 1/\sigma$ and the SVM penalty $C$ were calibrated by exploring all the combinations of parameters in the interval [100, 500], with a subdivision of 50 (in the case of parameter $C$) and in the interval [0.05, 0.5] with a subdivision of 0.05 (for parameter $\gamma$). Once the best parameters were found ($C$, $\gamma$), a finer

**Table 1**
Estimation of parameters $C$ and $\gamma$ using SVM according to the type of binary partition one-versus-all (1-vs.-R): anchovy (A), jack mackerel (J), common sardine (S), other (R).

| Type of partition (1-vs.-R) | Parameters (C, $\gamma$) |
|---|---|
| A-vs.-R | (150, 0.14) |
| J-vs.-R | (110, 0.12) |
| S-vs.-R | (117, 0.15) |

separation was made around these, with subdivisions of 0.01 for $\gamma$ and 1 for $C$ (Robotham et al., 2010).

Table 2 shows the confusion matrices for the multi-class SVM approach and the classification-tree method. The SVM classification rate was only 2.7% higher than that of the classification-tree method. The average classification rate was 89.5% for SVM and 86.8% for the classification-tree method. The SVM performance for classifying jack mackerel was 81.5%, 11.1% better than the performance of the classification-tree method. The anchovy classification rate was 90.8% for both methods, while the SVM classification performance for the common sardine was 90.3%, 2.9% better than the performance of the classification-tree method. The jack mackerel schools had the lowest classification rate.

Fig. 3 shows the decision tree classifier, 14 nodes are displayed and the relative importance of the division is indicated by the impurity measurements, obtained with the Gini impurity value. The splitting criterion corresponds to a decrease in impurity. The pruning that was done allowed for reducing the tree size from 20 to 14 nodes. The 1 standard error rule was used (Breiman et al., 1984; Ripley, 1996) for selecting the right size tree. The tree shows 8 terminal nodes (3; 5–6; 9–11 and 13–14). The first division has an improvement of 0.121. The two first levels contribute with an improvement of 0.357, equivalent to 81% of the total improvement. Three of the five tree levels are determined by the bottom-depth bathymetric descriptor. The school internal acoustic-density descriptor determines the third level of the tree. The fourth level includes the school-shore distance positional descriptor and the fifth level includes the school altitude-index bathymetrical descriptor.

Analyzing the results of the classification-tree methods, it is possible to distinguish that jack mackerel is a pelagic species preferentially distributed at greater bottom-depth than anchovy and sardine. This behaviour is reflected in the bottom-depth descriptor (>399 m) that was located in terminal node 6 in the second level of the tree. The terminal node 6 classified principally jack mackerel. The node 3 (bottom-depth $\leq$47.5 m) and node 5 (bottom-depth between 112.5 and 399 m) classified the anchovy. The terminal nodes 9 and 10 principally separate the common sardine and anchovy, respectively. The school internal acoustic-density descriptor ($\leq$2.1 nmi$^{-2}$) and bottom-depth ($\leq$64.5 m) classified common sardine in the terminal node 9. The school internal acoustic-density descriptor ($\leq$2.1 nmi$^{-2}$) and bottom-depth (>64.5 m) classified anchovy in the terminal node 10. The school internal acoustic-density descriptor (>2.1 nmi$^{-2}$) and distance to the coast ($\leq$5.7 nmi) classified common sardine in the terminal node 11. Finally, the school altitude index separates anchovy and common sardine (nodes 13 and 14, fifth level).

Fig. 4 shows the standardized importance of the school descriptors for each classification method. The bathymetrical descriptors (school-altitude index, mean school depth, bottom depth), and positional descriptors like school-shore distance are the most important school descriptors in both methods. Kendallís coefficient of concordance between the methods was 0.77. There is not complete agreement between the methods, the bottom-depth descriptor was more important for the classification-tree method while the school-altitude index was more important for SVM. In

**Table 2**
Confusion matrix for multi-class one species versus the rest (1-vs.-R) SVM classification and classification tree method (CART).

| Species | Jack mackerel | Anchovy | Common sardine | Total | Classification rate (%) |
|---|---|---|---|---|---|
| 1-vs.-R | | | | | |
| Jack mackerel | 22 | 5 | 0 | 27 | 81.5 |
| Anchovy | 0 | 89 | 9 | 98 | 90.8 |
| Common sardine | 0 | 10 | 93 | 103 | 90.3 |
| | | | | 228 | 89.5 |
| CART | | | | | |
| Jack mackerel | 19 | 5 | 3 | 27 | 70.4 |
| Anchovy | 1 | 89 | 8 | 98 | 90.8 |
| Common sardine | 0 | 13 | 90 | 103 | 87.4 |
| | | | | 228 | 86.8 |

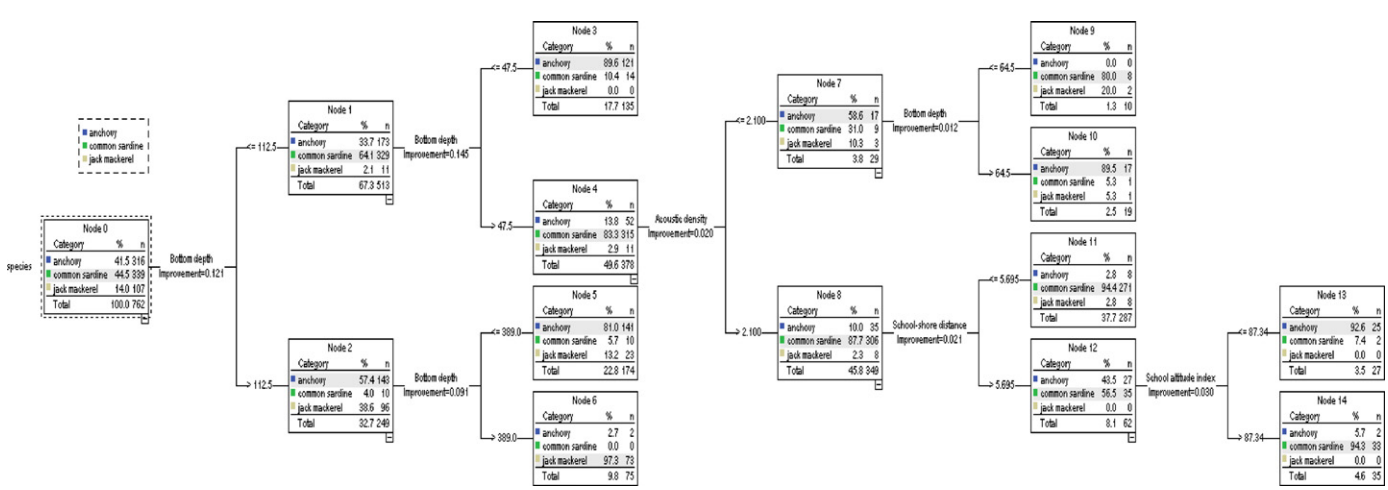


**Fig. 3.** Decision tree for fish school clasification.

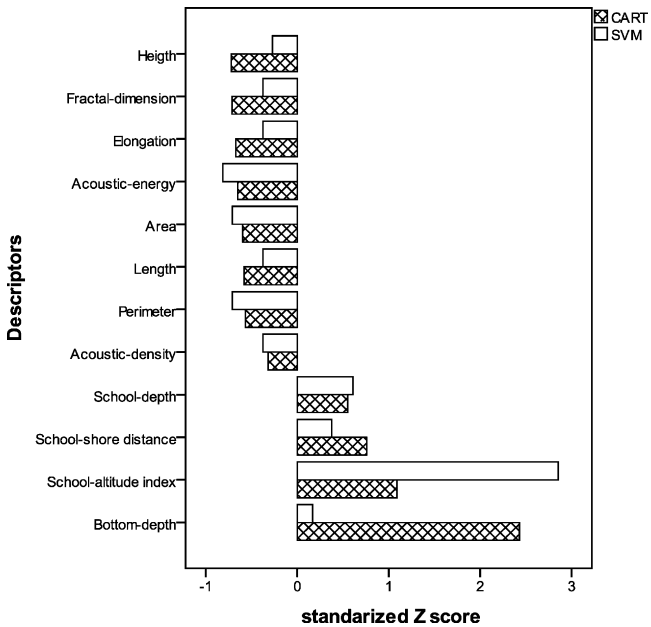


**Fig. 4.** Descriptors importance by method expressed in terms of a standardized *Z* score. Classification tree (CART); Support vector machines (SVM).

general, morphological school descriptors have a low incidence in the species-classifications of any of these methods.

## 4. Discussion

The purpose of this study was to compare the results of the classification of the pelagic species of fish common sardine, anchovy, and jack mackerel with classification trees and the support vector machine, using mono-frequency acoustic data in southern-central Chile. The performances of both classifiers are quite similar in classifying species. In general, the average performance of both methods was good in the classification of the three species, the performance of SVM being slightly higher (2.7%). The average classification rate was 89.5% for SVM and 86.8% for the classification-tree method. Similarly, even with the poorest results with jack mackerel, the difference between the two methods was 11.1%, the classification rate being 81.5% for SVM and 70.4% for the classification-tree method. This success rate is similar to what has been reported with others methods that have success rates between 77% and 96% (Haralabous and Georgakarakos, 1996; Simmonds et al., 1996; Lawson et al., 2001; Cabreira et al., 2009; Korneliussen et al., 2009; Fernandes, 2009).

The classification will probably be less effective when the species studied have similar biological characteristics, such as individual size, similar behaviour or acoustical characteristics. In the present case, the anchovy and common sardine live closer the coast than the jack mackerel. The latter species has a broad limit in its distribution. Although the common sardine and anchovy cohabit the same space and have similar acoustical properties and very few differences in the shapes and sizes of schools, both methods have what can be considered good performance in distinguishing the two species (90.8% for anchovy) and between 87.4% (CART) and 90.3% (SVM) for sardine. Jack mackerel is a pelagic species that is distributed preferably in the slope at greater bottom-depth than anchovy and sardine. The bottom-depth descriptor (>399 m) and terminal node 6 in the tree method graph (Fig. 3) show this behaviour very well. Jack mackerel schools have the lowest classification rates, 70.4% (CART) and 81.5% (SVM). The lower performance could be due to the imbalance in the training data. These results might be considered acceptable, but can be improved.

The levels of importance of the descriptors attributed to by the two methods are not fully concordant (Kendall's rank coefficient of concordance is 0.77). However, the two methods agree on the groups of descriptors considered effective for classification. This highlights the importance of the bathymetric and positional descriptors in the classification of species with respect to energy and morphometric descriptors. The bottom depth descriptor was more important for classification trees while school-altitude index was for SVM. Although the energetic descriptors had low incidence on the separation of species, the descriptor acoustic-density is remarkable for the classification tree method (Fig. 4). In general, morphological school descriptors have a low incidence in the species-classification with either method. These results are consistent with those of Korneliussen et al. (2009). These authors used multi-frequency acoustic data combined with information about morphological and geographical distribution of fish species to classify fish-schools. They also concluded that the morphological descriptors used were not effective discriminators, which coincides with our results. Probably single beam acoustic images of fish schools are partial and poor representations of the real morphology of the fish aggregation. This could explain that the morphological descriptors were not effective discriminators. The variability of morphological descriptors may possible be reduced by using multibeam echosounders (Trenkel et al., 2008) and then provide useful information for a better classification.

The greatest difficulty in implementing SVM is in the calibration of the parameters ($C$, $\gamma$), because an experimental protocol is required. The parameters of Gaussian kernel $\gamma$ and the penalty $C$ will affect the confusion matrix and the final classification rates. The SVM method operates like a black box in that it is necessary to include some sensitivity analysis of the school descriptors-parameters to facilitate the interpretation of the results, which implies more processing time. Among the main advantages of SVM method are that no statistical assumptions are required, it works best when the data set is limited; the solutions are global and unique, thereby avoiding the convergence to local minima exhibited by other statistical systems, such as neural networks. The performance is better than those of other techniques.

The classification tree technique has some advantages over SVM in that it is easier to implement and interpret. As with the SVM method, no statistical assumptions are required. The binary algorithms allow for assessing the importance of the variables. On the other hand, a binary algorithm tends to generate multi-leveled trees. Consequently, it is possible that the tree does not present the most effective results, above all if the same descriptor (variable) has been used to divide several consecutive levels. In particular, the tree (Fig. 3) shows that the two first levels are determined consecutive by the bottom-depth bathymetric descriptor. One major problem with the tree method is the high variance. Often a small change in the data can result in a very different series of splits, making interpretation somewhat precarious (Hastie et al., 2001). Bagging (Breiman, 1996) and random Forest (Breiman, 2001) averages many trees to reduce this variance.

Fernandes (2009) argues that most of the statistical techniques proposed for automatic classification of species have limited applicability in acoustic-survey practices. A general criticism of the classical methods of classification (ICES, 2000) is that the statistical assumptions can be violated, affecting the robustness of the results. With regard to artificial neural networks, the main criticisms are that the technique is difficult to apply and it operates as a black box. In this context, this author recommends implementing the classification tree as a standard tool for acoustical surveys. Our results agree with those of Fernandes (2009), but because each classification method has its own performance, limitations and advantages, we recommend using multiple classifiers as a good practice.

The computational efficiency of the tree architecture and the high precision of SVM classification have recently been used in a generation of multiclass classifiers (Mulay et al., 2010; Madzarov et al., 2009; Fei and Liu, 2006) that can also be used in the classification of fish, thus broadening the alternative among available classifiers. The development of algorithms of automatic classification and the classification of fish species is still an on-going research issue.

## Acknowledgements

The authors wish to thank the referees for their careful reading and constructive remark. This work was supported by the "Universidad Diego Portales (Chile)" and "Instituto de Fomento Pesquero (Chile)". The field data was collected with the support of projects financed by the Chilean Fisheries Research Fund (FIP in Spanish) of the Undersecretary of Fisheries.

## References

Barange, M., 1994. Acoustic identification, classification and structure of biological patchiness on the edge of the Agulhas Bank and its relationship to frontal features. S. Afr. J. Mar. Sci. 14, 333–347.
Bermejo, S., 2007. Fish age classification based on length, weight, sex and otolith morphological features. Fish. Res. 84, 270–274.
Bottou, L., Cortes, C., Denker, J., Drucker, H., Guyon, I., Jackel, L., LeCun, Y., Muller, U., Sackinger, E., Simard, P., Vapnik, V., 1994. Comparision of classifier methods: a case study in hand writing digit recognition. Proc. Int. Conf. Pattern Recognit., 77–87.
Breiman, L., 1996. Bagging predictors. Mach. Learn. 24 (2), 123–140.
Breiman, L., 2001. Random forests. Mach. Learn 45 (1), 5–32.
Breiman, L., Friedman, J., Olshen, R.A., Stone, C.J., 1984. Classification and Regresión Trees. Chapman and Hall.
Buelens, B., Pauly, T., Williams, R., Sale, A., 2009. Kernel methods for the detection and classification of fish schools in single-beam and multibeam acoustic data. ICES J. Mar. Sci. 66, 1130–1135.
Cabreira, A.G., Tripode, M., Madirolas, A., 2009. Artificial neural networks for fish-species identification. ICES J. Mar. Sci. 66, 1119–1129.
Coetzee, J., 2000. Use of a shoal analysis and patch estimation system (SHAPES) to characterize sardine schools. Aquat. Living Resour. 13, 1–10.
Crammer, K., Singer, Y., 2001. On the algorithm implementation of multiclass kernel-based vector machines. J. Mach. Learn. Res. 2, 265–292.
De'Ath, G., Fabricius, K.E., 2000. Classification and regression tree: a powerful yet simple technique for ecological data analysis. Ecology 81 (11), 3178–3192.
Demer, D.A., Cutter, G.R., Renfree, J.S., Butler, J.L., 2009. A statistical-spectral method for echo classification. ICES J. Mar. Sci. 66, 1081–1090.
Dietterich, T.G., Bakiri, G., 1995. Solving multiclass learning problem via error-correcting output codes. J. Artif. Intelligence Res. 2, 263–286.
Fablet, R., Lefort, R., Karoui, I., Merger, L., Massé, J., Scalabrin, C., Boucher, J.M., 2009. Classifying fish schools and estimating their species proportions in fishery-acoustics surveys. ICES J. Mar. Sci. 66, 1136–1142.
Fei, B., Liu, J., 2006. Binary tree of SVM: a new fast multiclass training and classification algorithm. IEEE Trans. Neural Netw. 17 (3), 696–704.
Fernandes, P.G., 2009. Classification trees for species identification of fish-school echotraces. ICES J. Mar. Sci. 66, 1073–1080.
Fernandes, P.G., Korneliussen, R.J., Lebourges-Dhaussy, A., Masse, J., Iglesias, M., Diner, N., Ona, E., et al., 2006. The SIMFAMI proyect: species identification methods from acoustics multifrecuency information. Final report to the EC Number Q5RS-2001-02054.
Fleischman, S.J., Burwen, D.L., 2003. Mixture models for the species apportionment of hidroacoustics data, with echo-envelope length as the discriminatory variable. ICES J. Mar. Sci. 60, 592–598.
Foote, K., Knudsen, H., Vestnes, G., MacLennan, D., Simmonds, J., 1987. Calibration 20 of acoustics instruments for fish density estimation: a practical guide. ICES Cop. Res. 21 Rep. 144. 57.
Haralabous, J., Georgakarakos, S., 1996. Artificial neural networks as a tool for species identification of fish schools. ICES J. Mar. Sci. 53, 173–180.
Hastie, T., Tibshirirani, R., Friedman, J., 2001. The Elements of Statistical Learning. Springer.
Horne, J.K., 2000. Acoustic approaches to remote species identification: a review. Fish. Oceonogr. 94, 356–371.
Hsu, C.W., Lin, C.J., 2002. A comparison of methods for multi-class support vector machines. IEEE Trans. Neural Netw. 13, 415–425.
Hutin, E., Simard, Y., Archambault, P., 2005. Acoustic detection of a scallop bed from a single-beam echosounder in the St. Lawrence. ICES J. Mar. Sci. 62, 966–983.
ICES., 2000. Report on Echo Trace Classification. ICES Cooperative Research Report, 238.
Joachims, T., 2001. Learning to Classify Text Using Support Vector Machines. Methods, Theory and Algorithms. Kluwer Academic Publishers.
Kass, G.V., 1980. An exploratory technique for investigating large quantities of categorical data. Appl. Statist. 29, 119–127.
Knerr, S., Personnaz, L., Dreyfus, G., 1990. Single-layer learning revisited: a stepwise procedure for building and training a neural network. In: Fogelman, J. (Ed.), Neurocomputing: Algorithms, Architectures and Applications. Springer-Verlang, New York:.
Korneliussen, R.J., Heggelund, Y., Eliassen, I.K., Johansen, G.O., 2009. Acoustics species identification of schooling fish. ICES J. Mar. Sci. 66, 1111–1118.
Lawson, G.L., Barange, M., Fréon, P., 2001. Species identification of pelagic fish schools on the South African continental shelf using acoustic descriptors and ancillary information. ICES J. Mar. Sci. 58, 275–287.
Lefort, R., 2010. Apprentissaje et classification faiblement supervisee: application en acoustique halieutique. Th. Doct.: Traitement du signal et des telecommunications: UEB, Université de Rennes 1, Institut Télécom Bretagne: 2010telbo164, pp 154.
Lefort, R., Fablet, R., Boucher, J.M., 2010. Weakly supervised classification in images using soft random forest. In: European Conference on Computer Vision, 06–10 September, Heraklion, Greece 2010, pp. 185–198.
Lefort, R., Fablet, R., Boucher, J.M., 2011. Objet recognition using proportion-based prior information: application to fisheries acoustics. Pattern Recognit. Lett. 2 (2), 153–158.
MacLennan, D.N., Holliday, D.V., 1996. Fisheries and plankton acoustics: past, present, and future. ICES J. Mar. Sci. 53, 513–516.
Madzarov, G., Gjorgjevikj, D., Chorbev, I., 2009. A multi-class SVM classifier utilizing binary decision tree. Informatica 33, 233–241.
Morris, C.W., Autret, A., Boddy, I., 2001. Support vector machines for identifying organism – a comparision with strongly partitioned radial basis function networks. Ecol. Model. 146, 57–67.
Mulay, S.A., Devale, P.R., Garge, G.V., 2010. Intrusion detection system using support vector machine and decision tree. Int. J. Comput. Appl. 3 (June), 40–43 (0975-8887).
Myriax, 2008. Echoview 4.60.58. Myriax software Ptyl Ltd., Tasmania, Australia.
Nero, R.W., Magnuson, J.J., 1989. Characterization of patches along transects using high-resolution 70-kHz integrated acoustics data. Can. J. Fish. Aquat. Sci. 46, 2056–2064.
Platt, J.C., Cristianini, N., Shawe-Taylor, J., 2000. Large margin DAGĩs for multiclass classification. Advances in Neural Information Processing Systems, vol. 12. MIT press, Cambridge, MA, pp. 547–553.
Quinlan, J.R., 1986. Induction of decision trees. Mach. Learn. 1, 81–106.
Quinlan, J.R., 1993. C4.5: Programs for Machine Learning. Morgan Kaufmann, San Mateo, CA.
Richards, L.J., Kieser, R., Mulligan, T.J., Candy, J.R., 1991. Classification of fish assemblages based on echo integration surveys. Can. J. Fish. Aquat. Sci. 48, 1264–1272.
Ripley, B.D., 1996. Pattern Recognition and Neural Networks. University Press, Cambridge.
Robotham, H., Bosch, P., Gutiérrez-Estrada, J.C., Castillo, J., Pulido-Calvo, I., 2010. Acoustics identification of small pelagic fish species in Chile using support vector machines and neural networks. Fish. Res. 102, 115–122.
Scalabrin, C., Massé, J., 1993. Acoustic detection of the spatial and temporal distribution of fish shoals in the Bay of Biscay. Aquat. Living Resour. 6, 269–283.
Scalabrin, C., Diner, N., Weill, A., Hillion, A., Mouchot, M.C., 1996. Narrowband acoustic identification of monospecific fish shoals. ICES J. Mar. Sci. 53, 181–188.
Scholkopf, B., Smola, A., 2002. Learning with kernels. The MIT Press, Cambridge, Massachusetts. London, England, p. 626.
Simmonds, E.J., MacLennan, D.N., 2005. Fisheries Acoustics: Theory and Practice. 2nd ed. Fish and Aquatic Resources Series 10. Blackwell Science, Oxford.
Simmonds, E.J., Armstrong, F., Copland, P.J., 1996. Species identification using wide-band backscatter with neural network and discriminant analysis. ICES J. Mar. Sci. 53, 189–195.
Snedecor, G.W., Cochran, W.G., 1980. Statistical methods. The Iowa State University Press, p. 507.
Tegowski, J., Gorska, N., Klusek, Z., 2003. Statistical analysis of acoustic echoes from underwater meadows in the eutrophic Puck Bay (southern Baltic Sea). Aquat. Living Resour. 16, 215–221.
Trenkel, V.M., Mazauric, V., Berger, L., 2008. The new fisheries multibeam echosounder ME70: description and expected contribution to fisheries research. ICES J. Mar. Sci. 65, 645–655.
Vapnik, V.N., 1995. The Nature of Statistical Learning Theory. Springer, New York.
Vray, D., Gimenez, G., Person, R., 1990. Attempt at classification of echo-sounder signals based on the linear discrimination function of Fisher. Rapp. Proc. Verb. Réun. Cons. Int. Expl. Mer. 189, 388–393.
Weston, J., Watkins, C., 1998. Multi-class support vector machines. In: Verleysen, M. (Ed.), Proceeding of ESANN99. Brussels, 1999. D. Facto Press, Available online at http://citeseer.ist.psu.edu/8884.html.
Woodd-Walker, R.S., Watkins, J.L., Brierley, A.S., 2003. Identification of Southern Ocean Acoustic targets using aggregation backscatter and shape characteristics. ICES J. Mar. Sci. 60, 641–649.